PATTY G

SKU:2121-34

The Patty G styling island is perfect for back-to-back styling students. The built in tool holders and drawers allow for easy access, while the quad outlets provide power for all of their tools.

TECHNICAL INFORMATION

- 34"W x 27.5"D x 84"H
- Powder coated steel uprights
- Counter top mounted tool holders and barbicide jar
- Holder drawer on each side
- Two mirrors
- Quad-plex outlets
- Purse hooks

SHIPPING INFORMATION

Item generally ships via Freight(Truck) service

- Weight: 350 lbs
- Dimensions: 96"L x 32"W x 40"H

WARRANTY

3 Years:

- Ball-Bearing Drawer Slides
- Cabinet hinges

1 Year:

- All remaining components, unless noted otherwise, are guaranteed for a period of one year from the date of purchase.

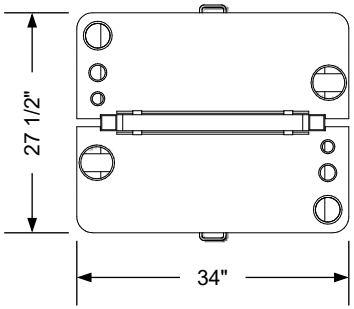

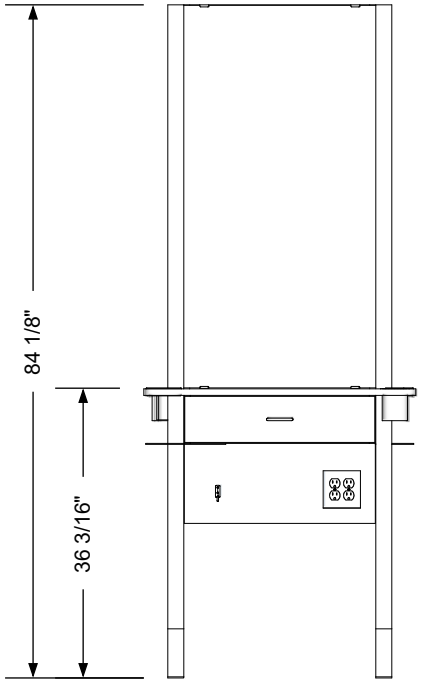

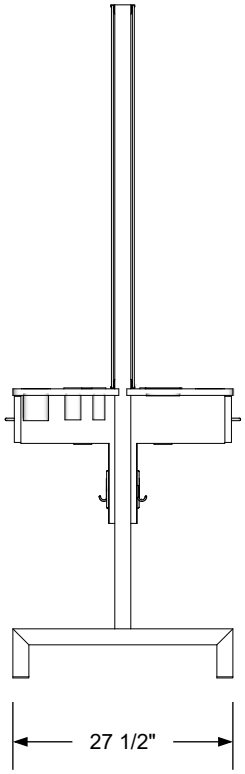

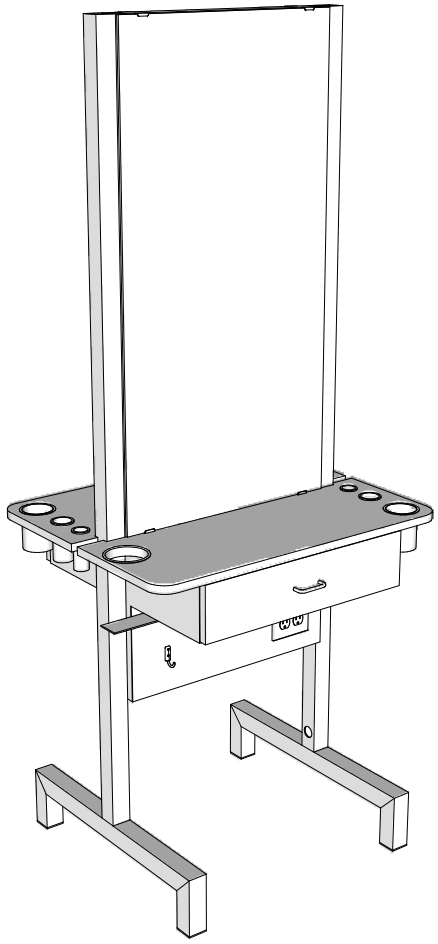

Additional Information

Assembly required - yes
Electrical required - yes
Plumbing required - no
Wall blocking required - no
COM yardage/laminate usage - 28 sf
1/8"h Plastic inserts in the bottom of legs
Other (specify) - n/a
Other (specify) - n/a

Specification Drawing

This **Specification Drawing** is intended for communicating the basic description, function, appearance, dimensions, features, and installation of an item as manufactured by Collins Manufacturing Company.Because this drawing does not contain project specific information such as quantities, finishes, or options, it is not an approval drawing and does not require a signature. This drawing remains the property of Collins Manufacturing Company and must not be used against the interests of Collins Manufacturing Company.

Product Information

collins

Collins Manufacturing
2000 Bowser Road
Cookeville, TN 38506

Name:			
Patty G B2B			
Size: NTS	Part Number: 2121-34		Drawn By: Eng
Prepared Date: 5/2/20	Revision Date: Date	Revision Number: Rev #	Sheet: 1 of 2

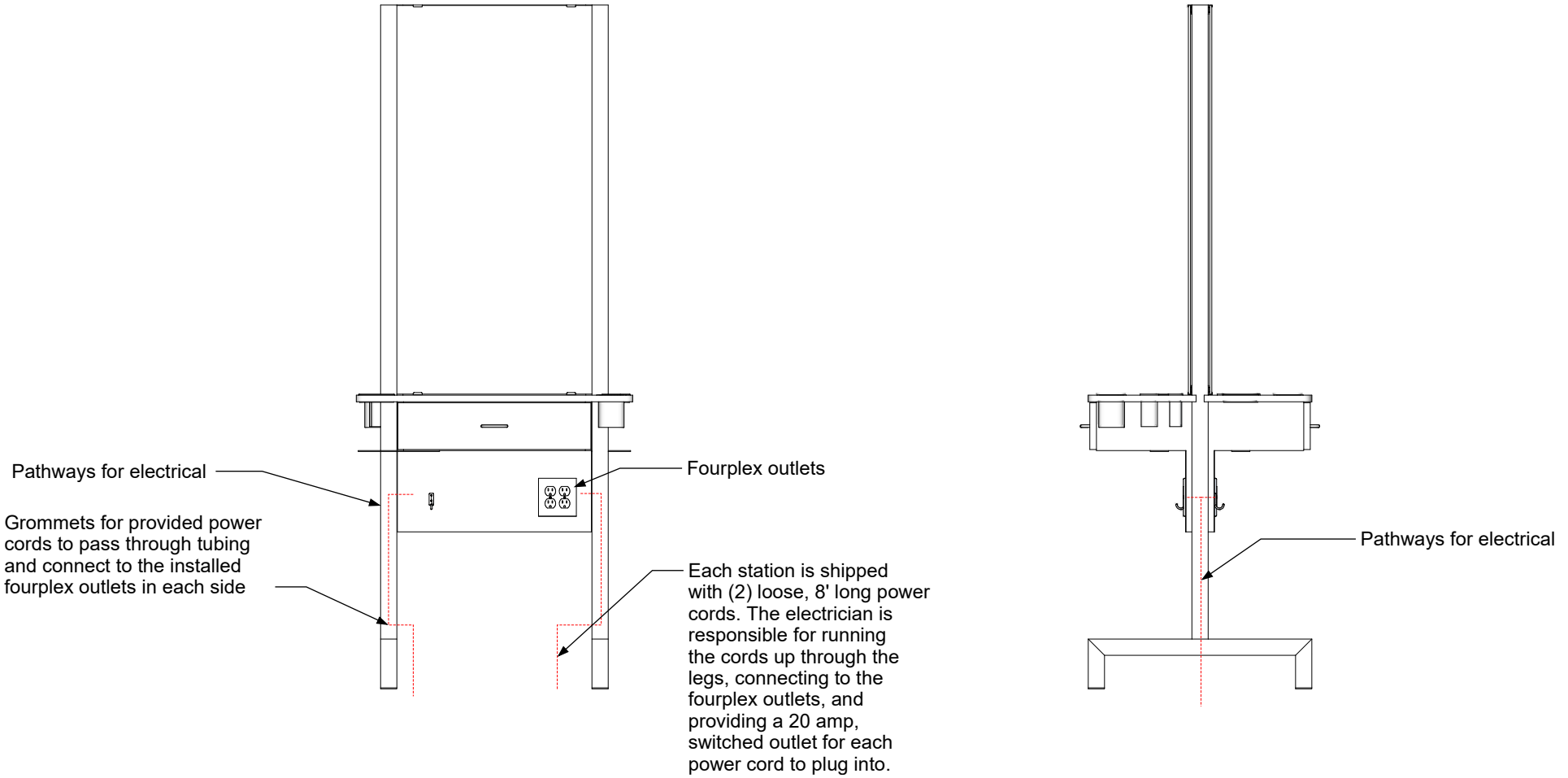

Electrical stub out detail

Additional Information

Assembly required - yes
Electrical required - yes
Plumbing required - no
Wall blocking required - no
COM yardage/laminate usage - 28 sf
1/8"h Plastic inserts in the bottom of legs
Other (specify) - n/a
Other (specify) - n/a

Specification Drawing

This **Specification Drawing** is intended for communicating the basic description, function, appearance, dimensions, features, and installation of an item as manufactured by Collins Manufacturing Company.Because this drawing does not contain project specific information such as quantities, finishes, or options, it is not an approval drawing and does not require a signature. This drawing remains the property of Collins Manufacturing Company and must not be used against the interests of Collins Manufacturing Company.

Product Information

collins

Collins Manufacturing
2000 Bowser Road
Cookeville, TN 38506

Name:			
Patty G B2B			
Size: NTS	Part Number: 2121-34		Drawn By: Eng
Prepared Date: 5/2/20	Revision Date: Date	Revision Number: Rev #	Sheet: 2 of 2